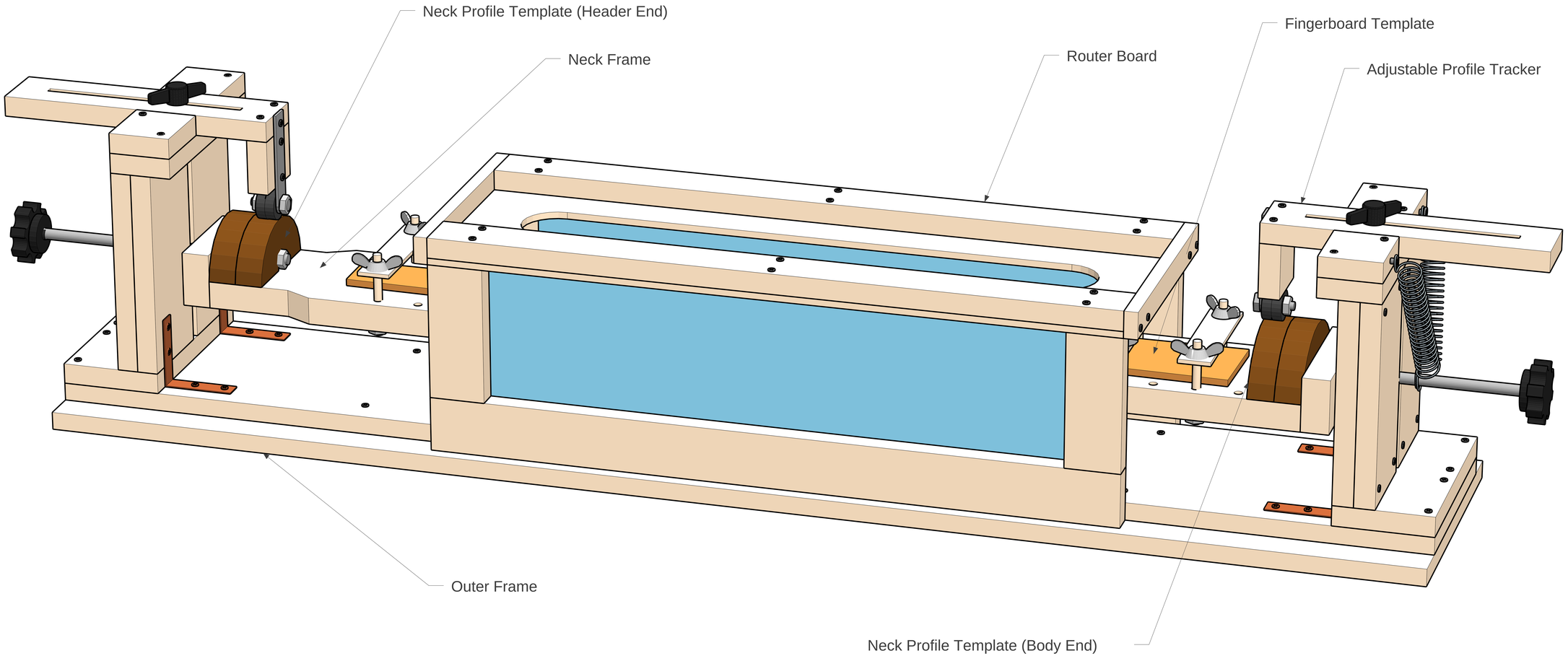
Neck Profile Template (Header End)
Neck Frame
Router Board
Fingerboard Template
Adjustable Profile Tracker
Outer Frame
Neck Profile Template (Body End)

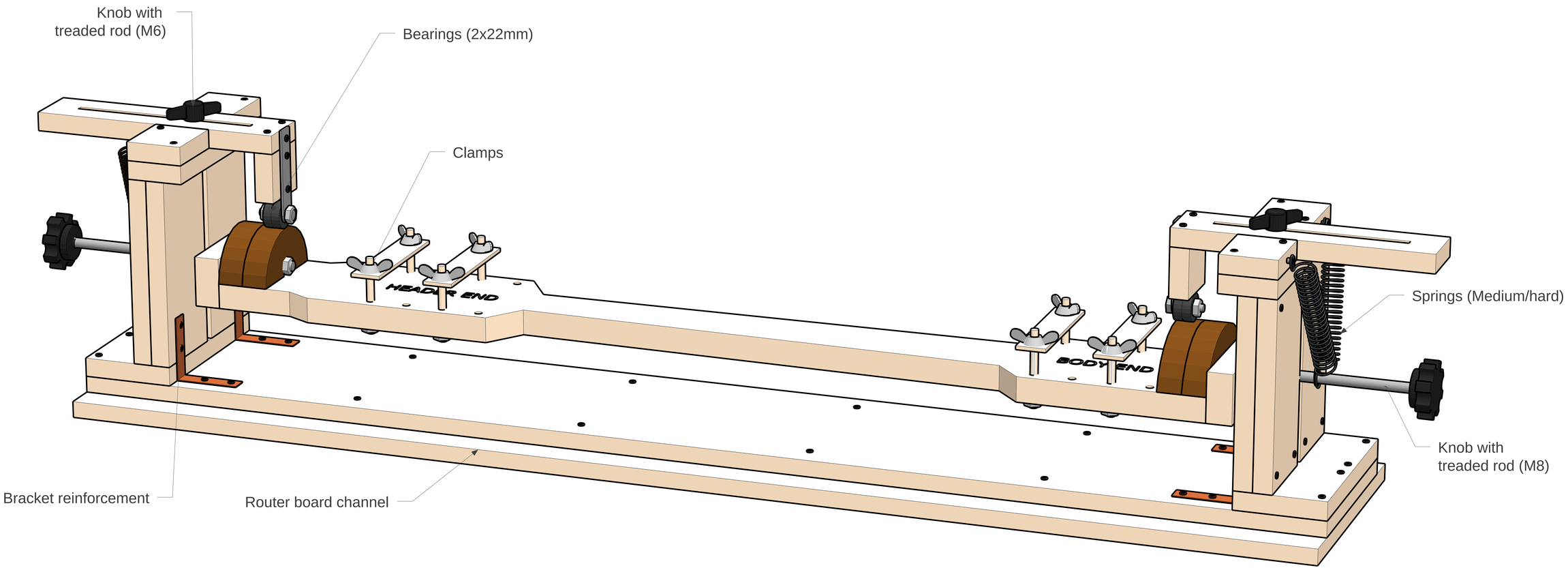
Knob with
treaded rod (M6)
Bearings (2x22mm)
Clamps
HEADER END
BODY END
Springs (Medium/hard)
Knob with
treaded rod (M8)
Bracket reinforcement
Router board channel

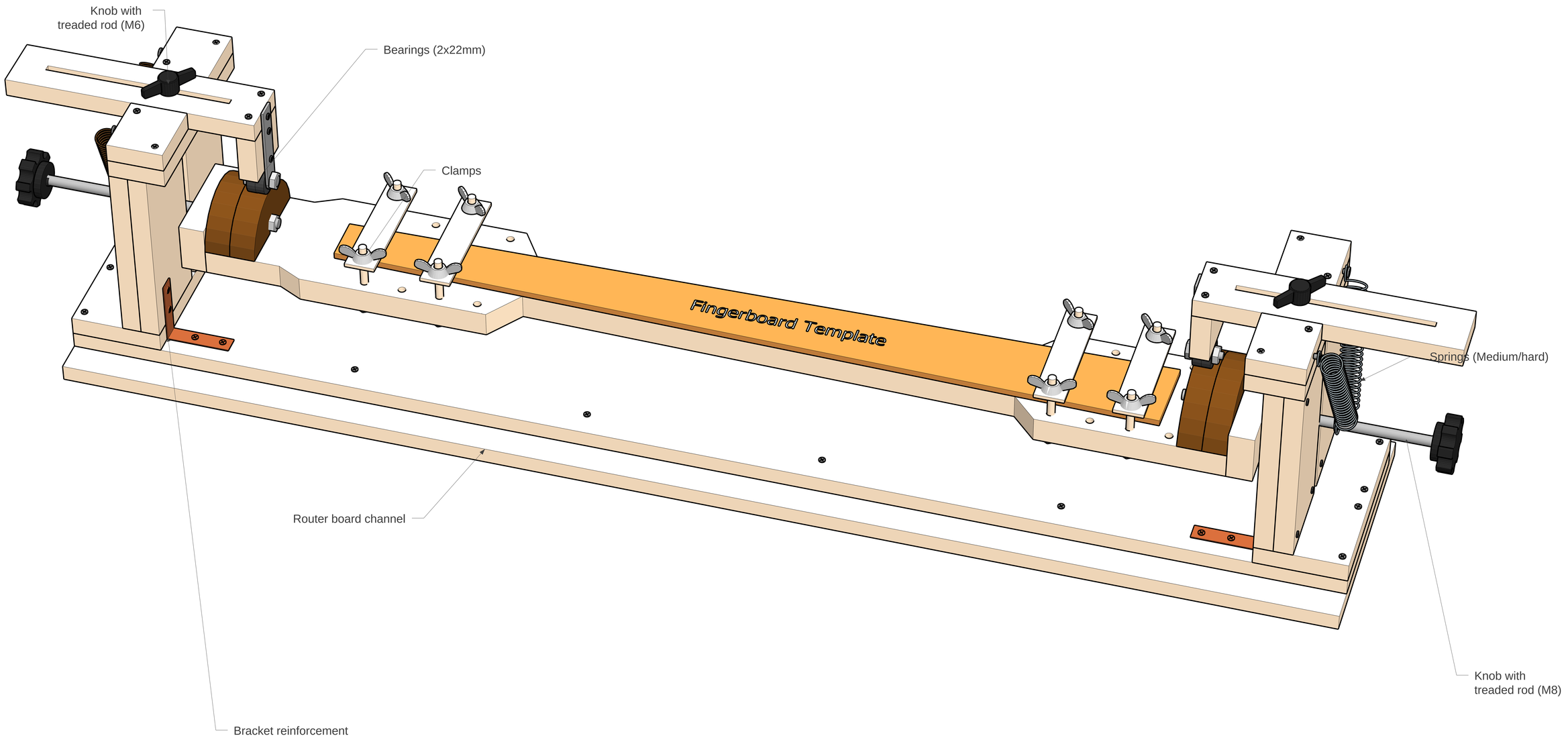
Knob with
treaded rod (M6)
Bearings (2x22mm)
Clamps
Fingerboard Template
Springs (Medium/hard)
Router board channel
Knob with
treaded rod (M8)
Bracket reinforcement

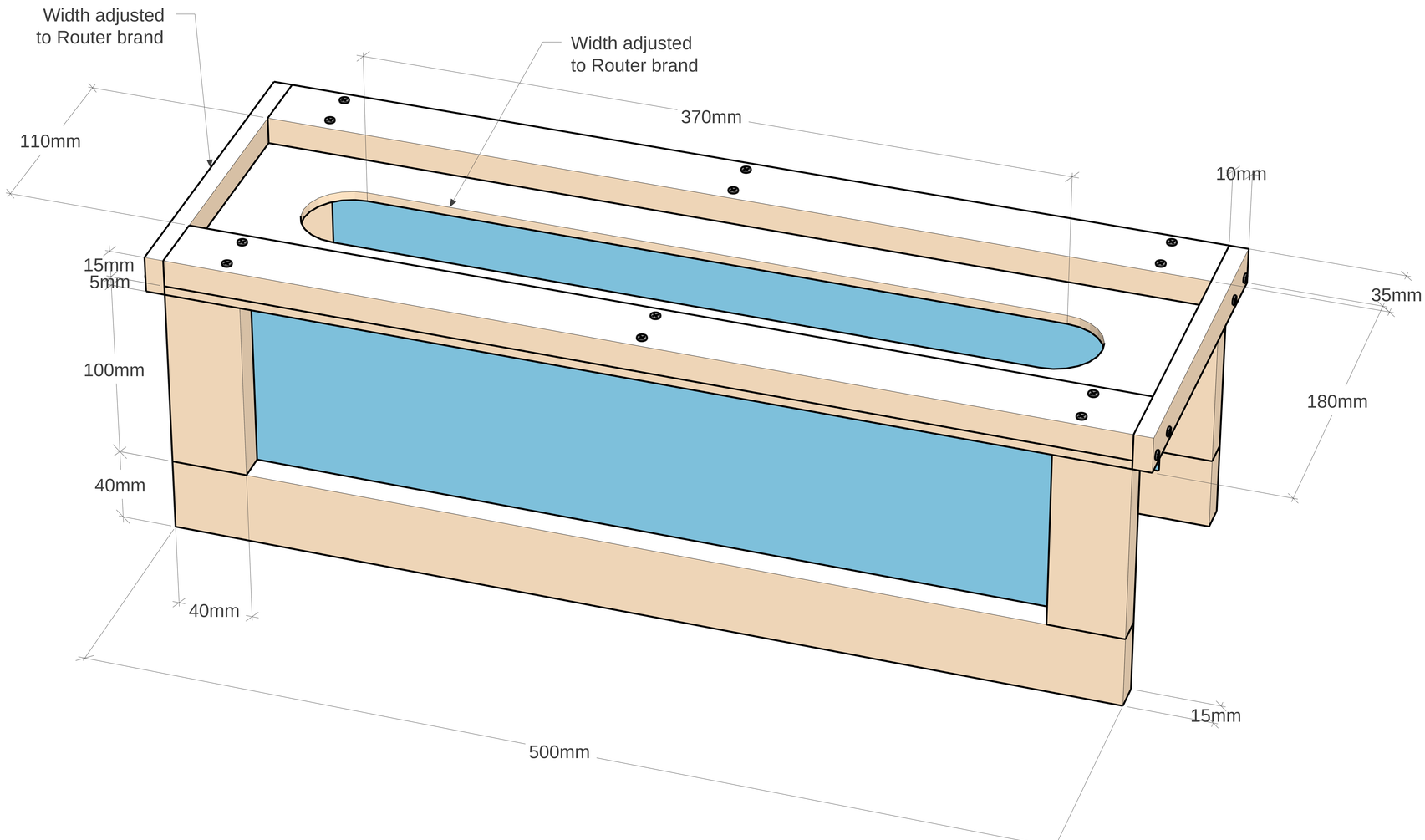
Width adjusted
to Router brand
Width adjusted
to Router brand
370mm
110mm
10mm
15mm
5mm
35mm
100mm
180mm
40mm
40mm
15mm
500mm

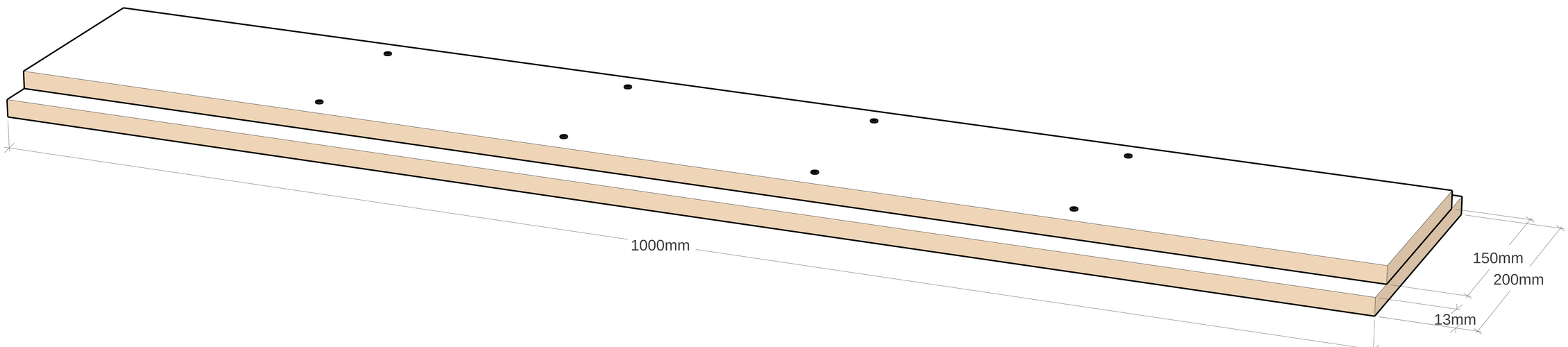
1000mm
150mm
200mm
13mm

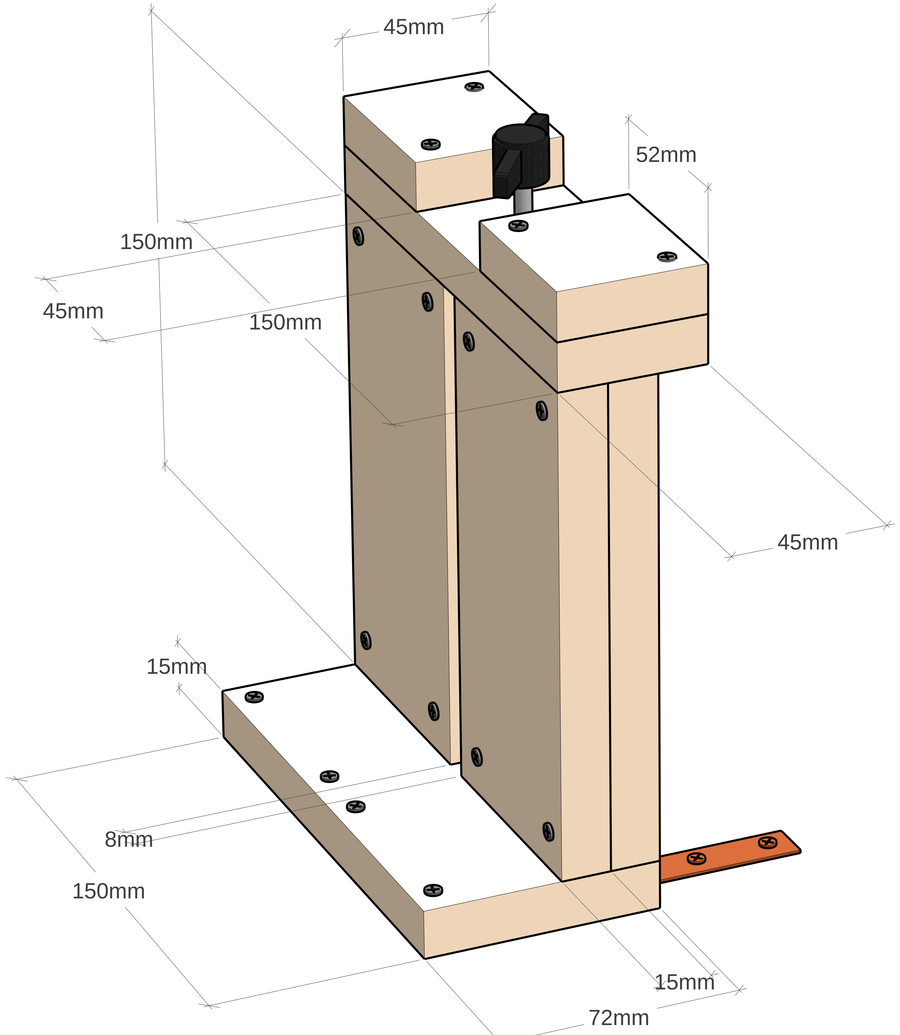
45mm
52mm
150mm
45mm
150mm
45mm
15mm
8mm
150mm
15mm
72mm

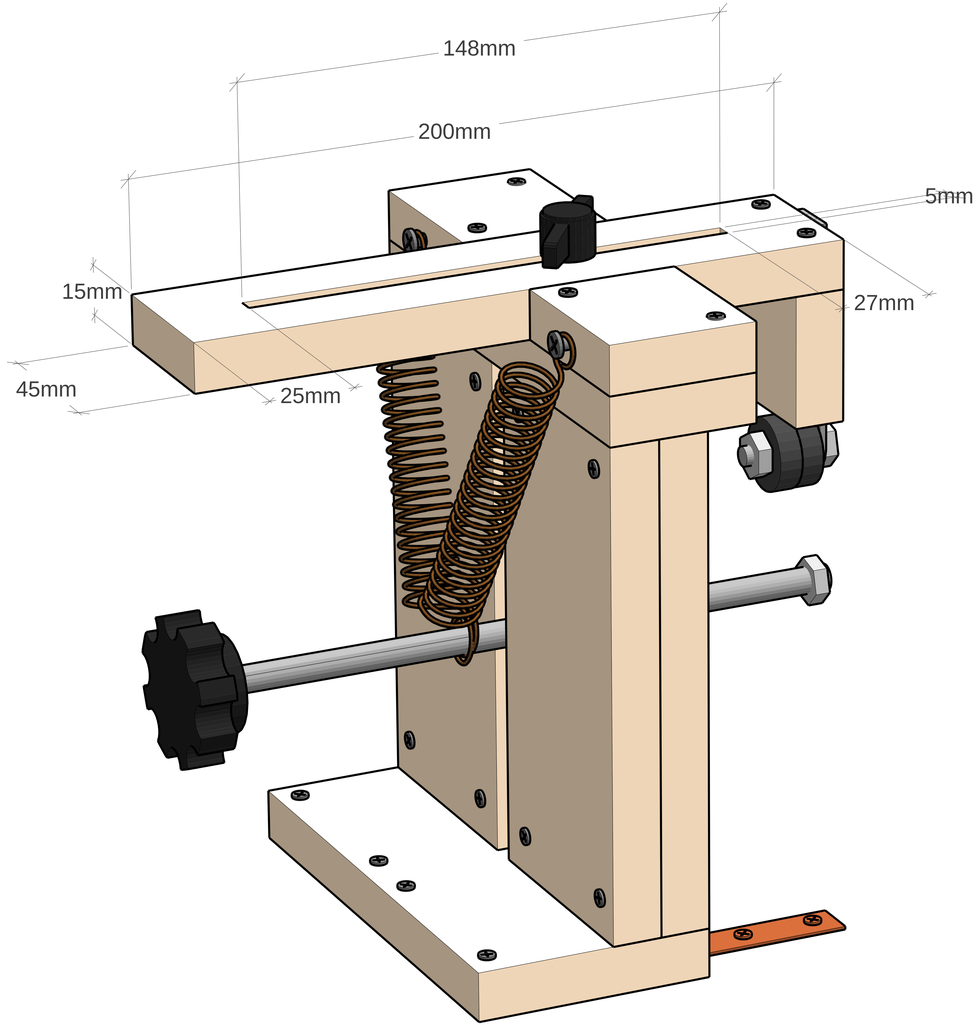
148mm
200mm
5mm
15mm
27mm
45mm
25mm

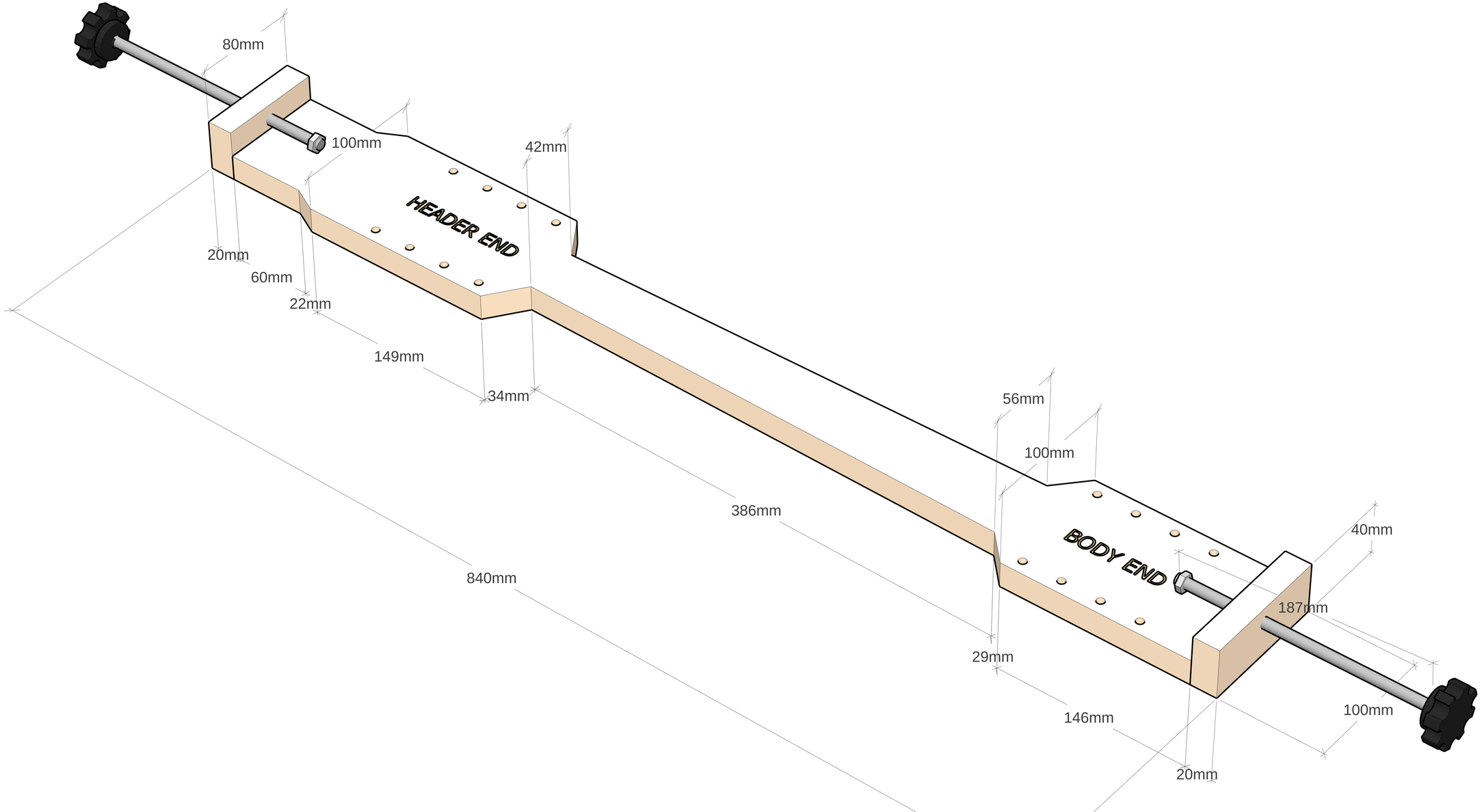
80mm
100mm
42mm
HEADER END
20mm
60mm
22mm
149mm
34mm
56mm
100mm
386mm
BODY END
40mm
840mm
187mm
29mm
146mm
100mm
20mm

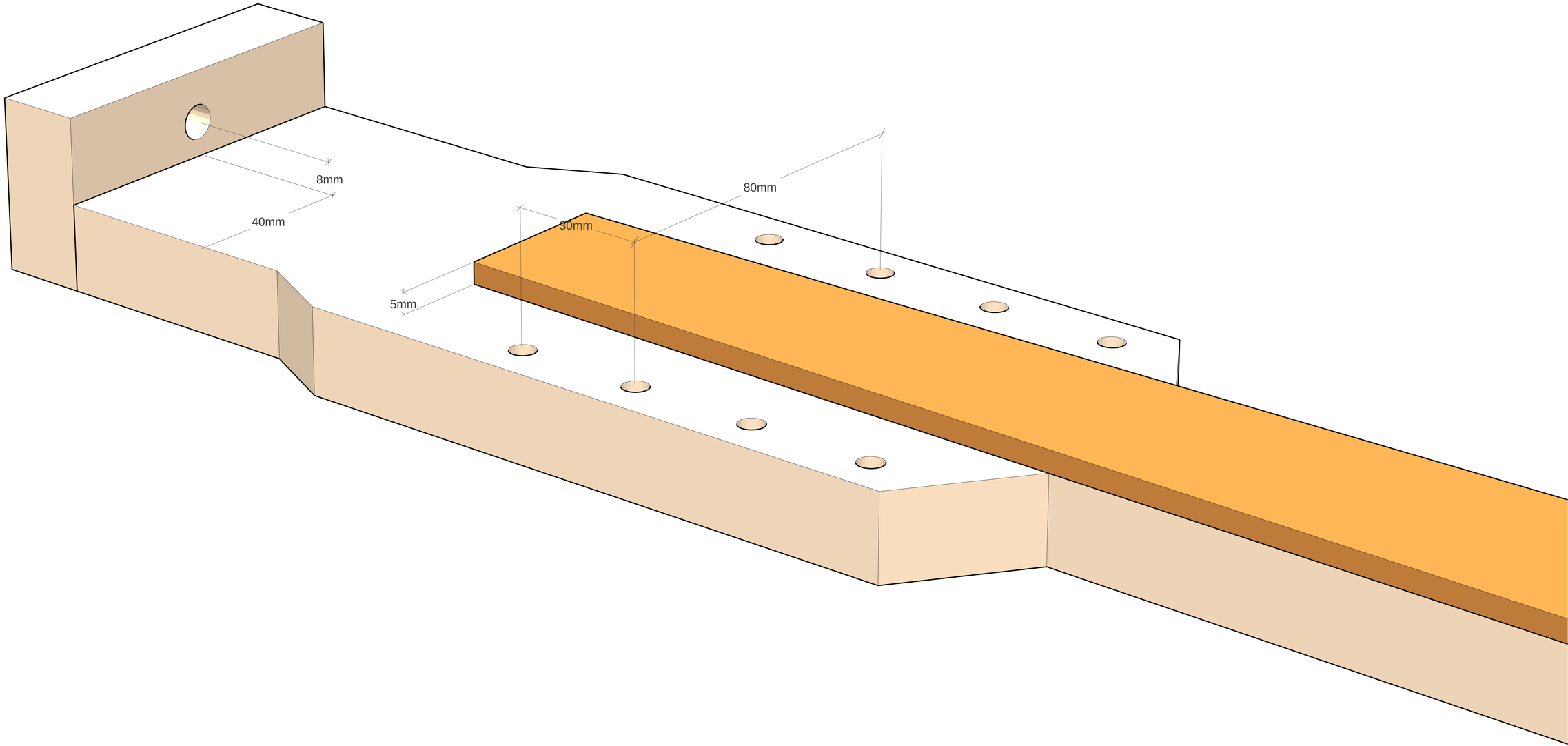
8mm
40mm
80mm
30mm
5mm

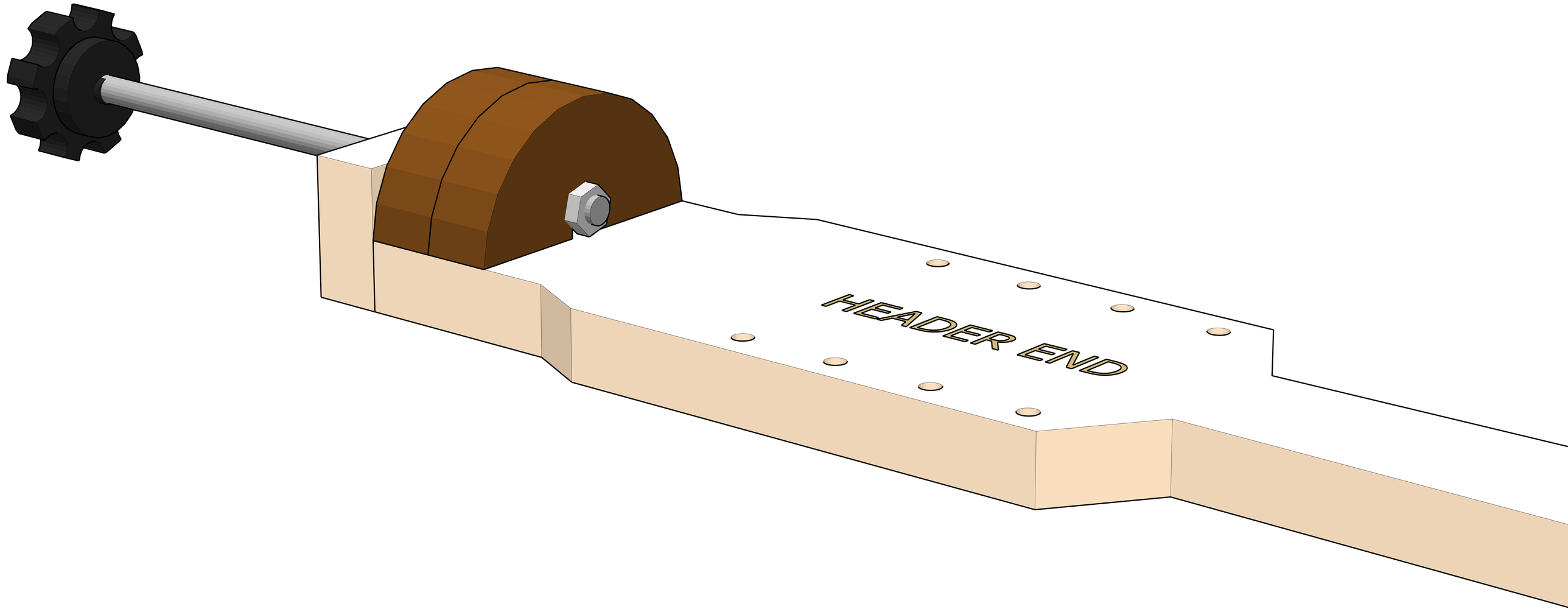
HEADER END

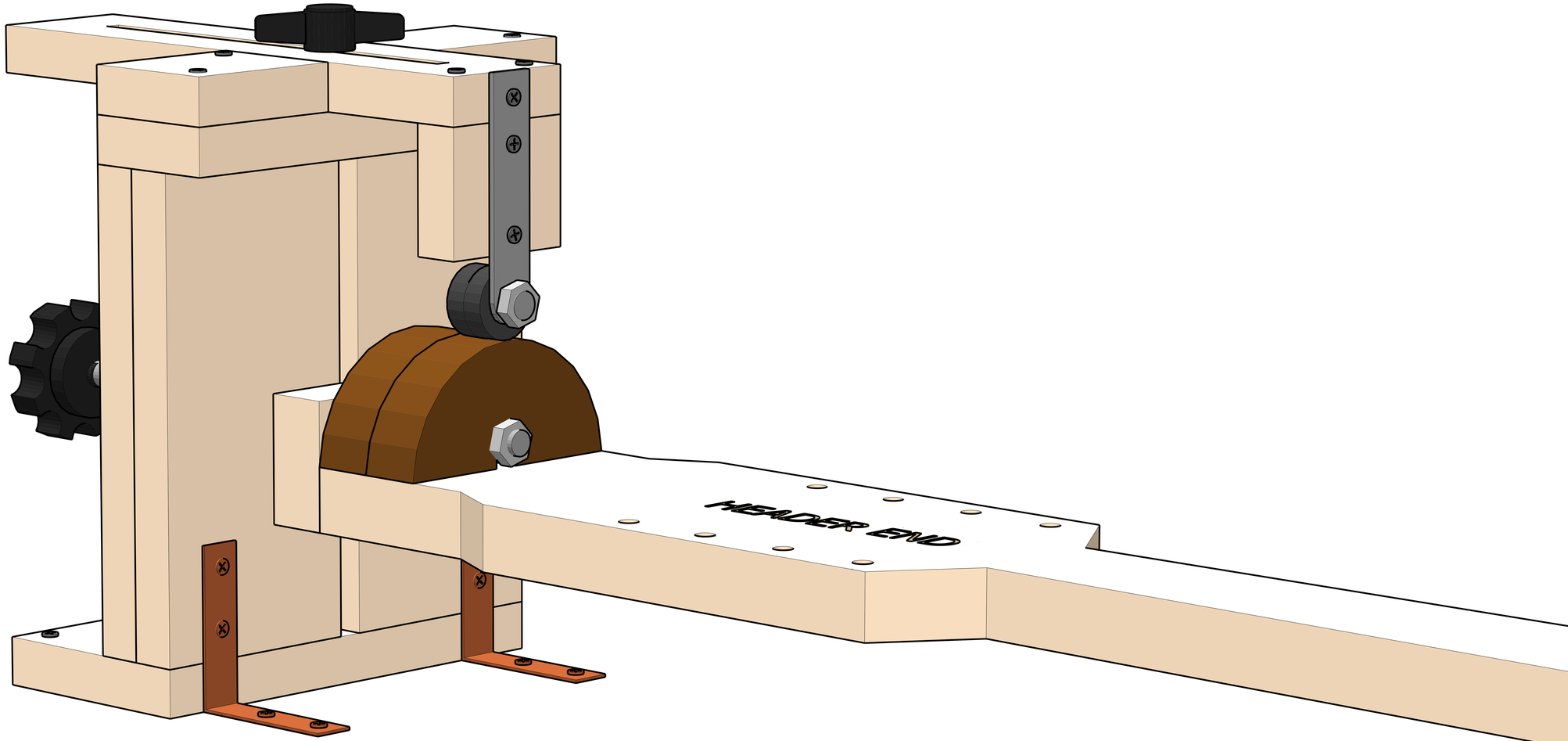
HEADER END